Spectus WINDOW SYSTEMS

ELITE 70

MAIN PROFILES

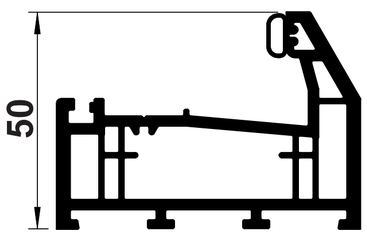

B01
BEVELLED SLIM
OUTER FRAME

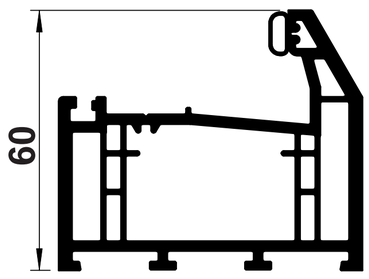

B02
BEVELLED INTERMEDIATE
OUTER FRAME

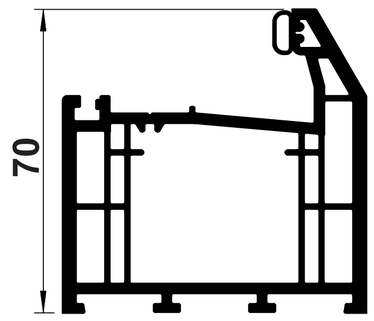

B03
BEVELLED LARGE
OUTER FRAME

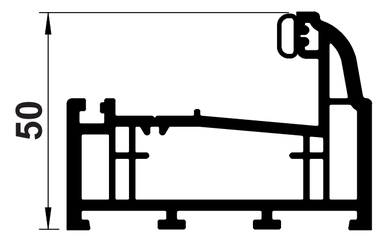

B05
OVOLO SLIM
OUTER FRAME

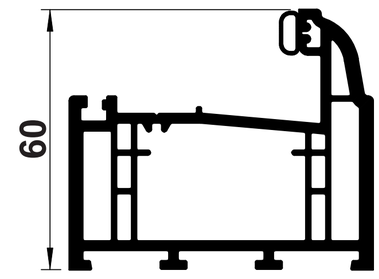

B06
OVOLO INTERMEDIATE
OUTER FRAME

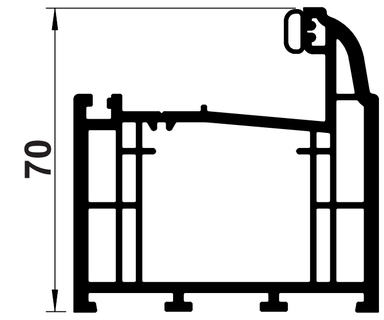

B07
OVOLO LARGE
OUTER FRAME

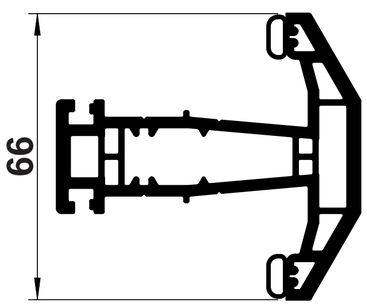

B10
BEVELLED SLIM
'T' TRANSOM

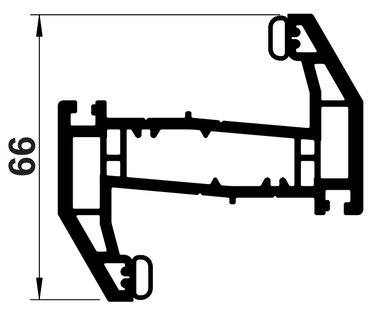

B11
BEVELLED SLIM
'Z' TRANSOM

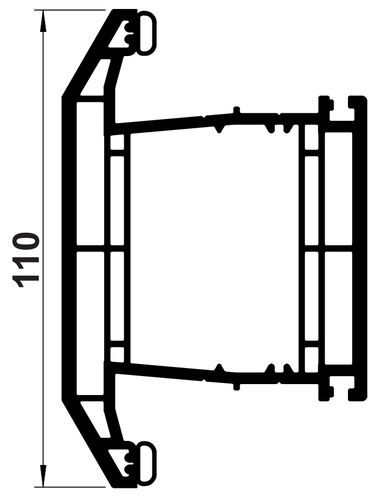

B14
BEVELLED 'T'
MIDRAIL

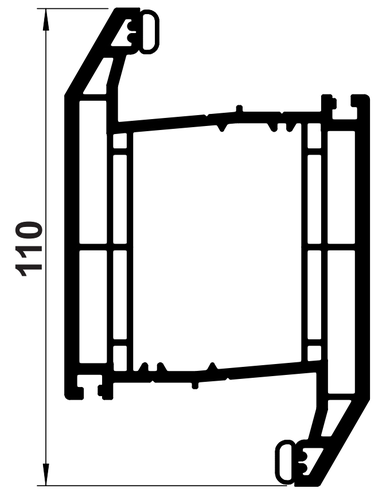

B15
BEVELLED 'Z'
MIDRAIL

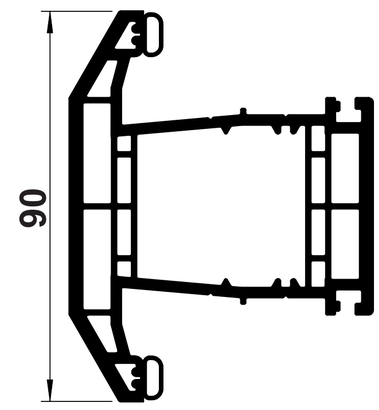

B16
BEVELLED LARGE
'T' TRANSOM

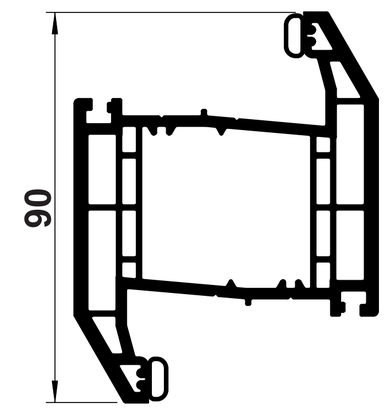

B17
BEVELLED LARGE
'Z' TRANSOM

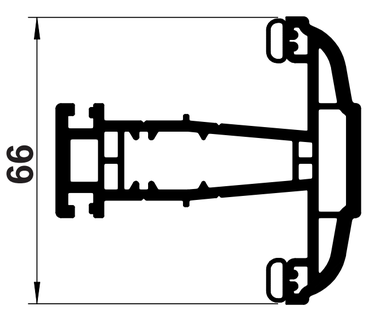

B20
OVOLO SLIM
'T' TRANSOM

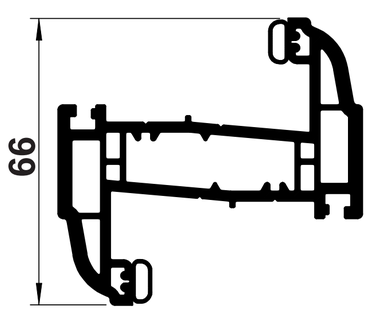

B21
OVOLO SLIM 'Z'
TRANSOM

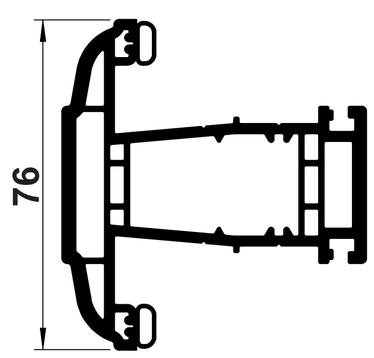

B22
OVOLO INTERMEDIATE
'T' TRANSOM

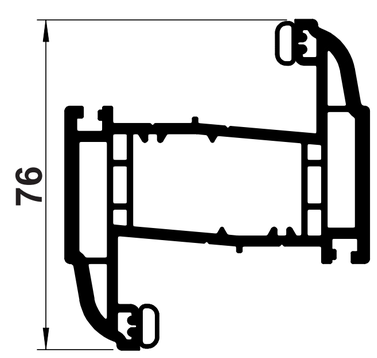

B23
OVOLO INTERMEDIATE
'Z' TRANSOM

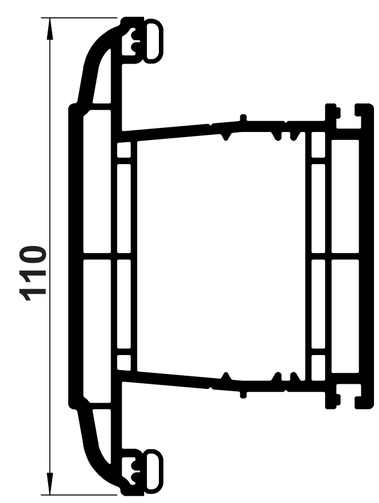

B24
OVOLO 'T'
MIDRAIL

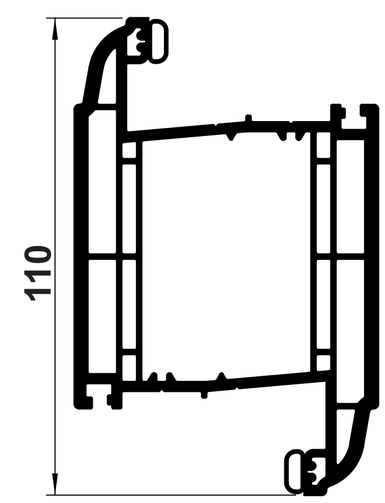

B25
OVOLO 'Z'
MIDRAIL

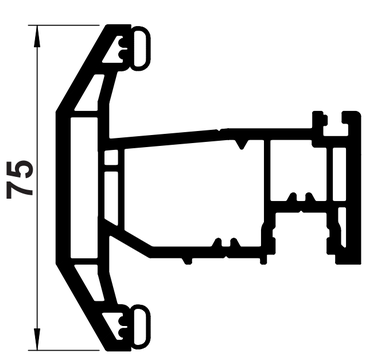

B30
BEVELLED 'T'
CASEMENT SASH

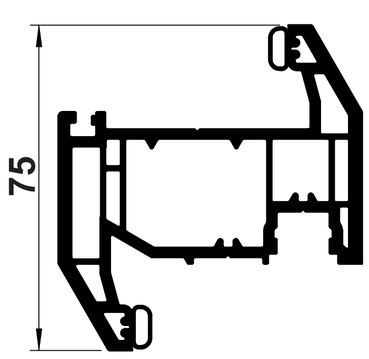

B31
BEVELLED 'Z'
CASEMENT SASH

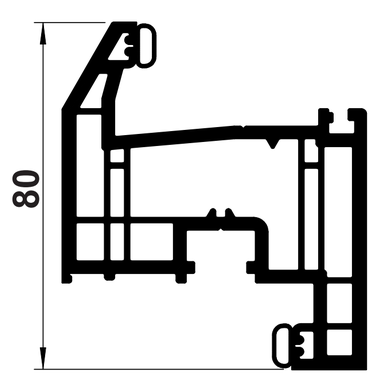

B33
BEVELLED 'Z'
TILT & TURN SASH

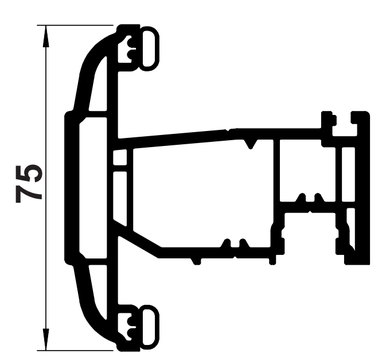

B35
OVOLO 'T'
CASEMENT SASH

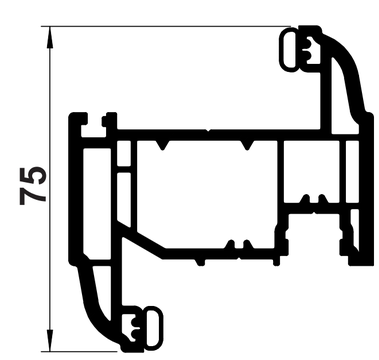

B36
OVOLO 'Z'
CASEMENT SASH

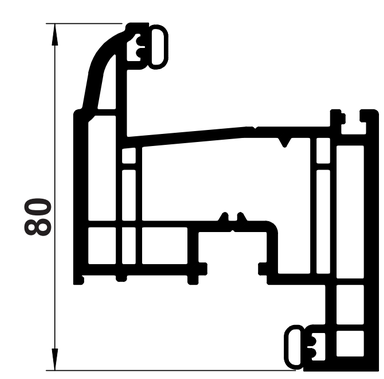

B38
OVOLO 'Z'
TILT & TURN SASH

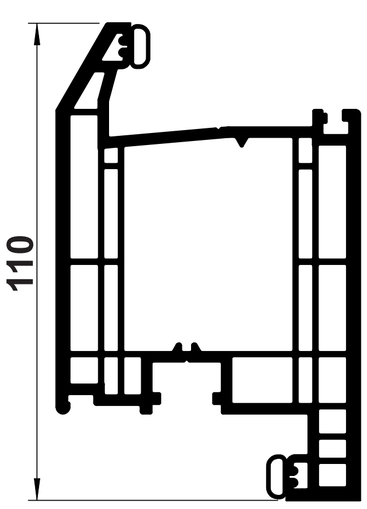

B40
BEVELLED 'Z'
DOOR SASH

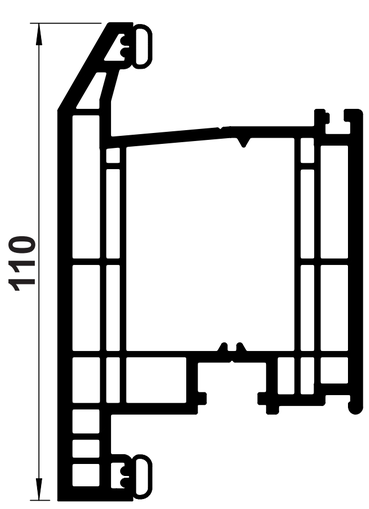

B41
BEVELLED 'T'
DOOR SASH

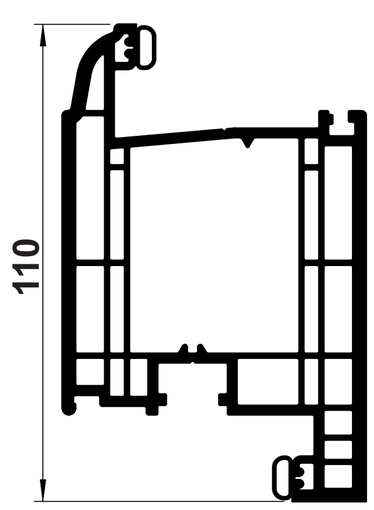

B45
OVOLO 'Z'
DOOR SASH

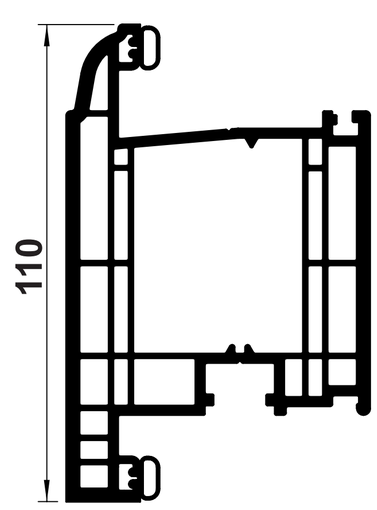

B46
OVOLO 'T'
DOOR SASH

B50
28mm BEVELLED
GLAZING BEAD

B60
28mm OVOLO
GLAZING BEAD

B55
40mm SLIM
GLAZING BEAD

B61
24mm OVOLO
GLAZING BEAD

B62
28mm STEP OVOLO
GLAZING BEAD

B66
44mm OVOLO
GLAZING BEAD

FULL SIZE AT A1